THIS DRAWING IS UNPUBLISHED. RELEASED FOR PUBLICATION 19
© COPYRIGHT 19 BY AMP INCORPORATED. ALL RIGHTS RESERVED.

LOC	DIST
AD	39

REVISIONS

P	LTR	DESCRIPTION	DATE	DWN	APVD
	O	RELEASED -1 PER NPR 196	29MAR99	-	-

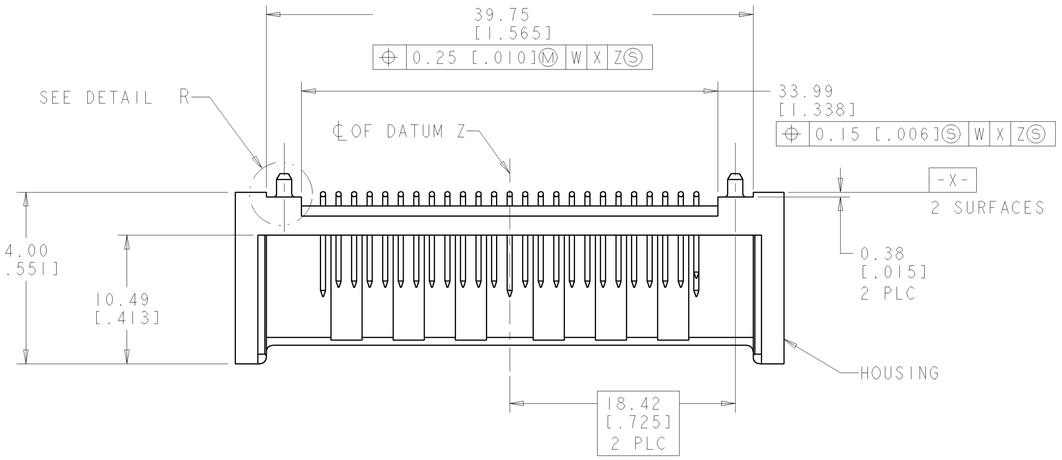

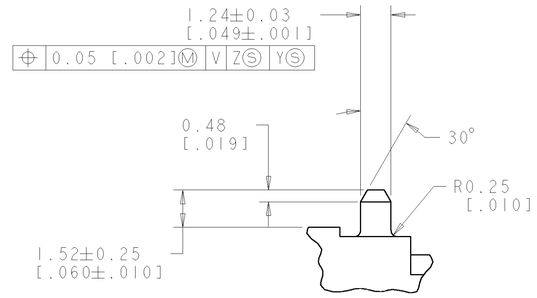

DETAIL R
SCALE 8:1
2 PLC

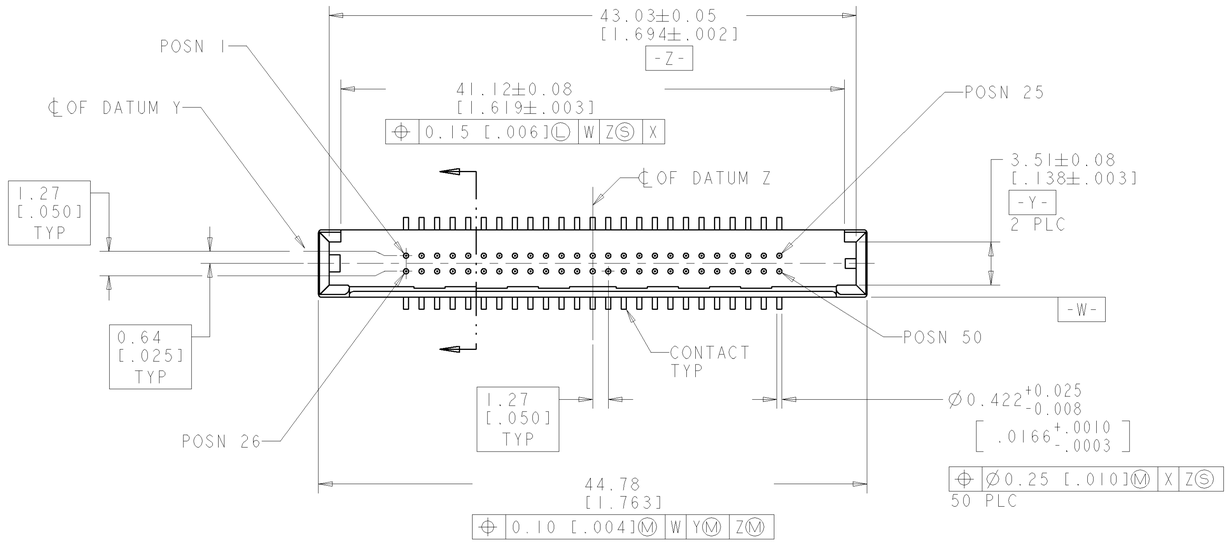

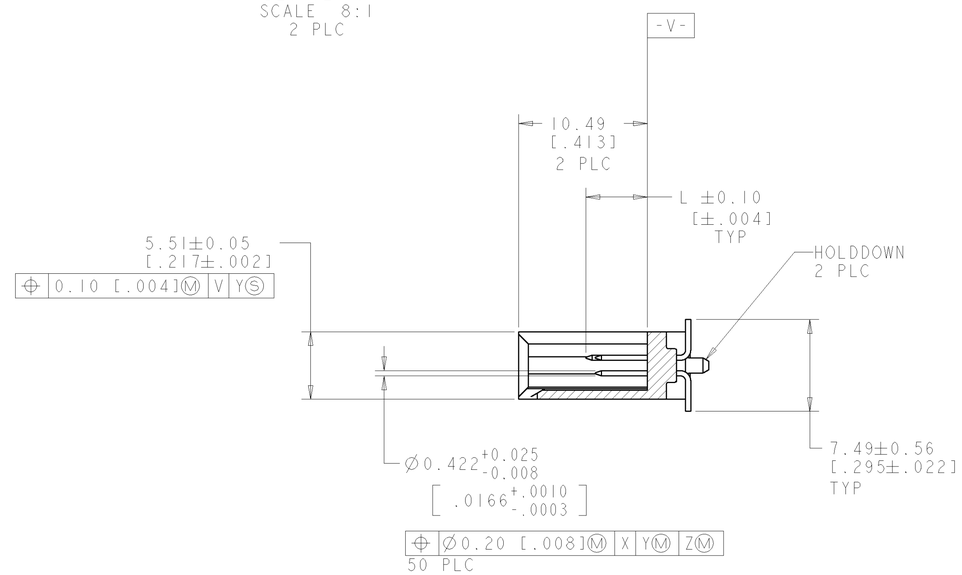

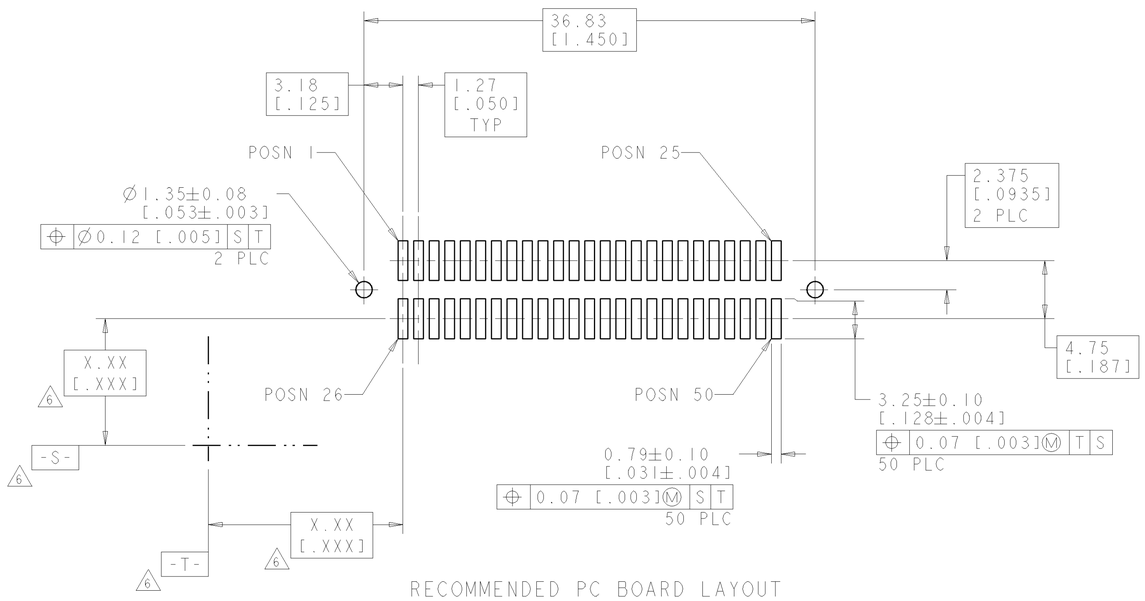

RECOMMENDED PC BOARD LAYOUT

1. HOUSING: POLYESTER LCP, BLACK.
   CONTACTS: BRASS.
2. CONTACTS: 0.76µm[.000030] MIN GOLD FOR A LENGTH OF 3.51[.138] MIN IN CONTACT AREA, 3.81µm[.000150] MIN TIN-LEAD FOR A LENGTH OF 3.76[.148] MIN ON SOLDER TAILS, ALL OVER 1.27µm[.000050] MIN NICKEL.
3. DIMENSION APPLIES TO POSITIONS 25 AND 26.
4. DIMENSION APPLIES TO POSITIONS 2 THRU 12, 14 THRU 24, 27 THRU 37 AND 39 THRU 49.
5. DIMENSION APPLIES TO POSITIONS 1, 13, 38 AND 50.
6. DATUMS AND BASIC DIMENSIONS ESTABLISHED BY CUSTOMER.

5.00 [.197] 5	4.24 [.167] 4	3.51 [.138] 3	788643-1
L			PART NUMBER

THIS DRAWING IS A CONTROLLED DOCUMENT FOR AMP INCORPORATED. IT IS SUBJECT TO CHANGE AND THE CONTROLLING ENGINEERING ORGANIZATION SHOULD BE CONTACTED FOR THE LATEST REVISION.

DIMENSIONS: mm [INCHES]

TOLERANCES UNLESS OTHERWISE SPECIFIED:
0 PLC ±-
1 PLC ±-
2 PLC ±0.13 [.005]
3 PLC ±-
4 PLC ±-
ANGLES ±2°

MATERIAL 1
FINISH 2

DWN D. HARDY 29MAR99
CHK C. OBERMAN 05APR99
APVD M. PERCHERKE 05APR99
PRODUCT SPEC 108-1469
APPLICATION SPEC -
WEIGHT -

AMP Incorporated
Harrisburg, PA 17105-3608

NAME PIN HEADER ASSEMBLY, VERTICAL, 50 POSITION, SURFACE MOUNT, CompactFlash

SIZE	CAGE CODE	DRAWING NO	RESTRICTED TO
A1	00779	C-788643	-

CUSTOMER DRAWING SCALE 4:1 SHEET 1 OF 1 REV O

AMP 4805 REV 27JUN96

Pro/ENGINEER DRAWING